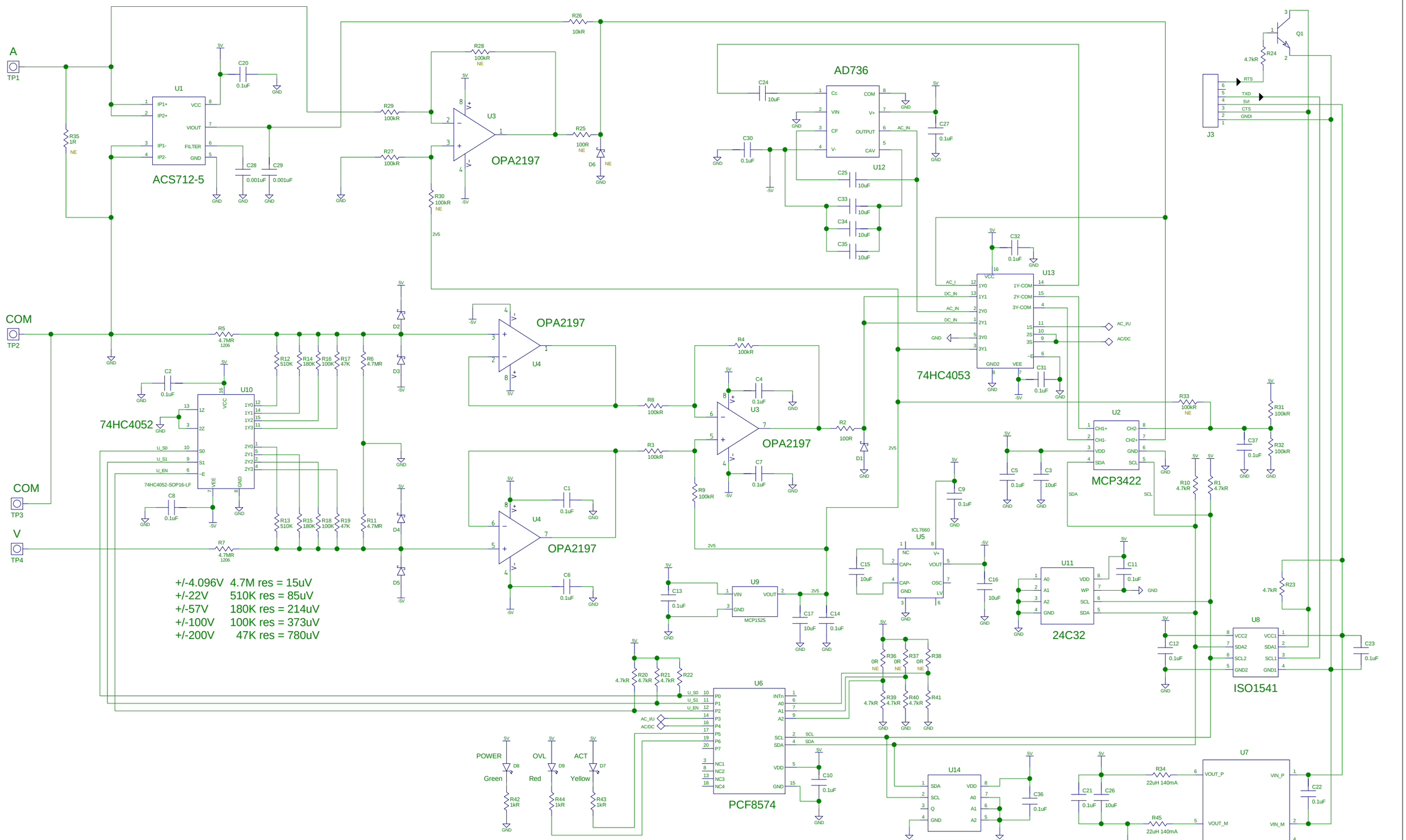

+/-4.096V 4.7M res = 15uV
+/-22V 510K res = 85uV
+/-57V 180K res = 214uV
+/-100V 100K res = 373uV
+/-200V 47K res = 780uV

FCALLBOX MULTIMETER MODULE
MARCH 2017

All diodes : BAS416